NEW

CanadianSolar

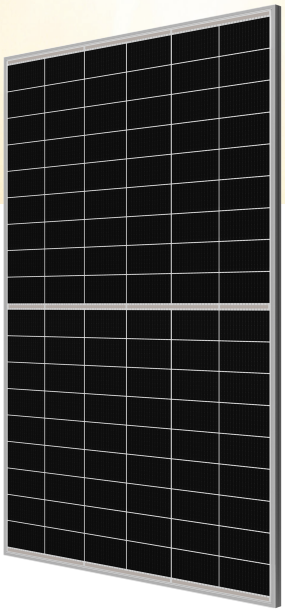

# TOPHiKu6

## N-type TOPCon Technology

## 495 W ~ 520 W

## CS6.2-54TM-495|500|505|510|515|520

### MORE POWER

520 W

Module power up to 520 W
Module efficiency up to 23.4 %

Excellent anti-LeTID & anti-PID performance.
Low power degradation, high energy yield

Lower temperature coefficient (Pmax): -0.29%/°C,
increases energy yield in hot climate

Lower LCOE & system cost

### MORE RELIABLE

Tested up to ice ball of 45 mm diameter
according to IEC 61215 standard

Minimizes micro-crack impacts

Heavy snow load up to 5400 Pa,
wind load up to 2400 Pa*

### MANAGEMENT SYSTEM CERTIFICATES*

ISO 9001:2015 / Quality management system
ISO 14001:2015 / Standards for environmental management system
ISO 45001: 2018 / International standards for occupational health & safety
IEC62941: 2019 / Photovoltaic module manufacturing quality system

### PRODUCT CERTIFICATES*

IEC 61215 / IEC 61730 / CE / MCS / UKCA / CGC
UL 61730 / IEC 61701 / IEC 62716 / IEC 60068-2-68
UNI 9177 Reaction to Fire: Class 1 / Take-e-way

* The specific certificates applicable to different module types and markets will vary, and therefore not all of the certifications listed herein will simultaneously apply to the products you order or use. Please contact your local Canadian Solar sales representative to confirm the specific certificates available for your Product and applicable in the regions in which the products will be used.

**CSI Solar Co., Ltd.** is committed to providing high quality solar photovoltaic modules, solar energy and battery storage solutions to customers. The company was recognized as the No. 1 module supplier for quality and performance/price ratio in the IHS Module Customer Insight Survey. Over the past 23 years, it has successfully delivered over 150 GW of premium-quality solar modules across the world.

* For detailed information, please refer to the Installation Manual.

**CSI Solar Co., Ltd.**
199 Lushan Road, SND, Suzhou, Jiangsu, China, 215129, www.csisolar.com, support@csisolar.com

## ENGINEERING DRAWING (mm)

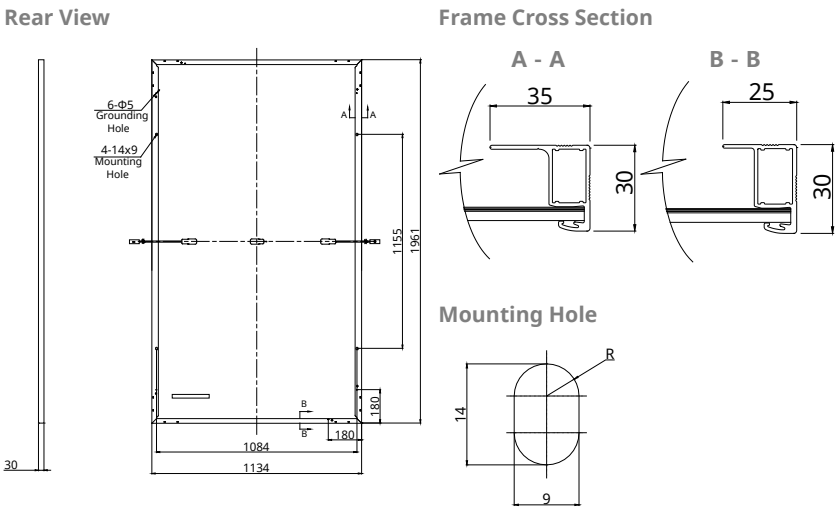


## CS6.2-54TM-505 / I-V CURVES

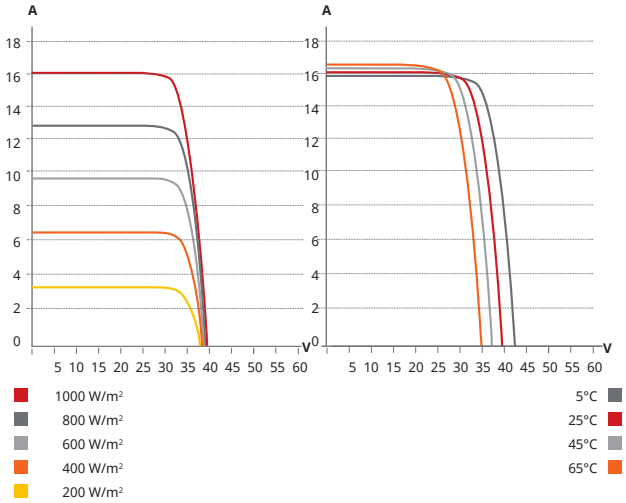


## ELECTRICAL DATA | STC*

| CS6.2-54TM | 495 | 500 | 505 | 510 | 515 | 520 |
|---|---|---|---|---|---|---|
| Nominal Max. Power (Pmax) | 495 W | 500 W | 505 W | 510 W | 515 W | 520 W |
| Opt. Operating Voltage (Vmp) | 33.2 V | 33.4 V | 33.6 V | 33.8 V | 34.0 V | 34.2 V |
| Opt. Operating Current (Imp) | 14.91 A | 14.98 A | 15.04 A | 15.10 A | 15.16 A | 15.22 A |
| Open Circuit Voltage (Voc) | 39.4 V | 39.6 V | 39.8 V | 40.0 V | 40.2 V | 40.4 V |
| Short Circuit Current (Isc) | 15.91 A | 16.00 A | 16.05 A | 16.10 A | 16.15 A | 16.20 A |
| Module Efficiency | 22.3% | 22.5% | 22.7% | 22.9% | 23.2% | 23.4% |
| Operating Temperature | -40°C ~ +85°C | | | | | |
| Max. System Voltage | 1500V (IEC/UL) | | | | | |
| Module Fire Performance | TYPE 1 (UL 61730 1500V) or TYPE 2 (UL 61730 1000V) or CLASS C (IEC 61730) | | | | | |
| Max. Series Fuse Rating | 30 A | | | | | |
| Protection Class | Class II | | | | | |
| Power Tolerance | 0 ~ + 10 W | | | | | |

* Under Standard Test Conditions (STC) of irradiance of 1000 W/m², spectrum AM 1.5 and cell temperature of 25°C.

## ELECTRICAL DATA | NMOT*

| CS6.2-54TM | 495 | 500 | 505 | 510 | 515 | 520 |
|---|---|---|---|---|---|---|
| Nominal Max. Power (Pmax) | 374 W | 378 W | 382 W | 386 W | 390 W | 393 W |
| Opt. Operating Voltage (Vmp) | 31.4 V | 31.6 V | 31.8 V | 32.0 V | 32.1 V | 32.3 V |
| Opt. Operating Current (Imp) | 11.93 A | 11.98 A | 12.03 A | 12.07 A | 12.12 A | 12.17 A |
| Open Circuit Voltage (Voc) | 37.3 V | 37.5 V | 37.7 V | 37.9 V | 38.1 V | 38.3 V |
| Short Circuit Current (Isc) | 12.82 A | 12.89 A | 12.93 A | 12.97 A | 13.01 A | 13.05 A |

* Under Nominal Module Operating Temperature (NMOT), irradiance of 800 W/m², spectrum AM 1.5, ambient temperature 20°C, wind speed 1 m/s.

## MECHANICAL DATA

| Specification | Data |
|---|---|
| Cell Type | TOPCon cells |
| Cell Arrangement | 108 [2 x (9 x 6) ] |
| Dimensions | 1961 × 1134 × 30 mm<br>(77.2 × 44.6 × 1.18 in) |
| Weight | 23.3 kg (51.4 lbs) |
| Front Glass | 3.2 mm tempered glass with anti-reflective coating |
| Frame | Anodized aluminium alloy |
| J-Box | IP68, 3 bypass diodes |
| Cable | 4 mm² (IEC), 12 AWG (UL) |
| Cable Length (Including Connector) | 300 mm (11.8 in) (+) / 200 mm (7.9 in) (-) or customized length* |
| Connector | T6 or MC4-EVO2 or MC4-EVO2A |
| Per Pallet | 36 pieces |
| Per Container (40' HQ) | 864 pieces |

* For detailed information, please contact your local Canadian Solar sales and technical representatives.

## TEMPERATURE CHARACTERISTICS

| Specification | Data |
|---|---|
| Temperature Coefficient (Pmax) | -0.29 % / °C |
| Temperature Coefficient (Voc) | -0.25 % / °C |
| Temperature Coefficient (Isc) | 0.045 % / °C |
| Nominal Module Operating Temperature | 41 ± 3°C |

## PARTNER SECTION

* The specifications and key features contained in this datasheet may deviate slightly from our actual products due to the on-going innovation and product enhancement. CSI Solar Co., Ltd. reserves the right to make necessary adjustment to the information described herein at any time without further notice. Please be kindly advised that PV modules should be handled and installed by qualified people who have professional skills and please carefully read the safety and installation instructions before using our PV modules.


**CSI Solar Co., Ltd.**
199 Lushan Road, SND, Suzhou, Jiangsu, China, 215129, www.csisolar.com, support@csisolar.com



March 2025. All rights reserved, PV Module Product Datasheet V1.2_EN