ASTRONERGY
A CHINT COMPANY

ASTRO 5s

Create Sustainable and Efficient Green Energy

CHSM54M-HC
Monofacial Series (182)

400~415W

PERC+ / Multi-busbar / Half-cut

Non-destructive cutting

PID resistance

Assist carbon neutrality CO_2

ISO 9001:2015:ISO Quality Management System
ISO 14001:2015:ISO Environment Management System
ISO 45001:Occupational Health and Safety
The first solar company which passed the Nord IEC/TS 62941 certification audit.

2021 TOP Performance PVEL

Tier 1 BloombergNEF

Underwritten by International Insurer

400~415W	0~+5W	21.3%	≤ 2.0%	≤ 0.55%
POWER RANGE	POWER TOLERANCE	MAX MODULE EFFICIENCY	FIRST YEAR POWER DEGRADETION	YEAR 2-25 POWER DEGRADETION

Electrical Specifications

STC: Irradiance 1000W/m^2, Cell Temperature 25° C, AM=1.5

Rated output (Pmpp / Wp)	400	405	410	415
Rated voltage (Vmpp / V)	31.09	31.26	31.43	31.60
Rated current (Impp /A)	12.86	12.96	13.05	13.13
Open circuit voltage (Voc / V)	37.00	37.20	37.40	37.60
Short circuit current (Isc /A)	13.65	13.76	13.88	13.99
Module efficiency	20.5%	20.7%	21.0%	21.3%

NMOT: Irradiance 800W/m^2, Ambient Temperature 20° C, AM=1.5, Wind Speed 1m/s

Rated output (Pmpp / Wp)	298.9	302.7	306.4	310.1
Rated voltage (Vmpp / V)	28.98	29.13	29.29	29.45
Rated current (Impp /A)	10.32	10.39	10.46	10.53
Open circuit voltage (Voc / V)	34.97	35.15	35.34	35.53
Short circuit current (Isc /A)	11.07	11.17	11.26	11.35

Curve

Current-Voltage (410W)

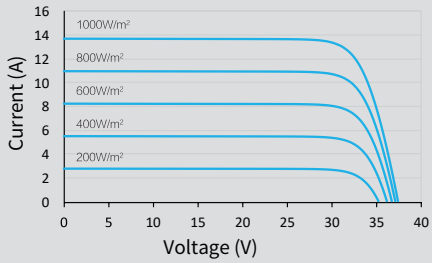

Power-Voltage (410W)

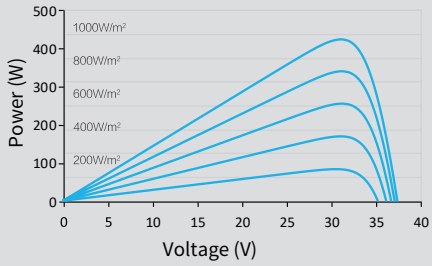

Current-Voltage (410W)

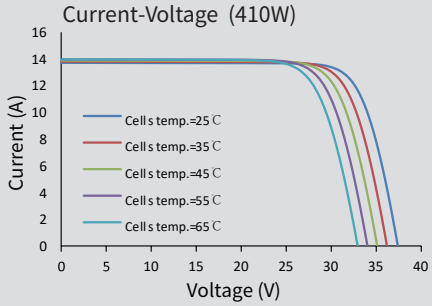

Temperature Ratings (STC)

Temperature coefficient (Pmpp)	-0.35%/°C
Temperature coefficient (Isc)	+0.045%/°C
Temperature coefficient (Voc)	-0.27%/°C
Nominal module operating temperature (NMOT)	41±2°C

Operating Parameters

No. of diodes	3
Junction box IP rating	IP 68
Max. series fuse rating	25 A
Max. system voltage (IEC/UL)	1500V$_{DC}$

Mechanical Specifications

Outer dimensions (L x W x H)	1722 x 1134 x 30 mm
Cell Type	P type Mono-crystalline
No. of cells	108 (6*18)
Frame technology	Aluminum, silver anodized
Front glass thickness	3.2 mm
Cable length (IEC/UL)	Portrait: 300 mm; Landscape: 1200 mm
Cable diameter (IEC/UL)	4 mm^2 / 12 AWG
① Maximum mechanical test load	5400 Pa (front) / 2400 Pa (back)
Connector type (IEC/UL)	HCB40 / MC4-EVO2 (optional)
Module weight	21.6 kg
Packing unit	36 pcs / box (Subject to sales contract)
Weight of packing unit (for 40'HQ container)	821 kg
Modules per 40' HQ container	936 pcs

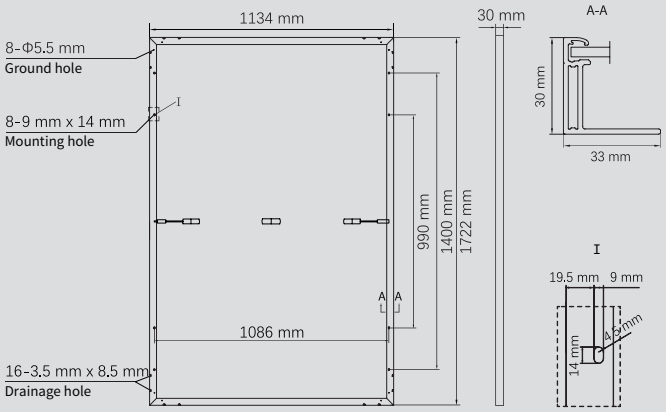

① Refer to Astronergy crystalline installation manual or contact technical department.
Maximum Mechanical Test Load=1.5×Maximum Mechanical Design Load.

© Chint Solar (Zhejiang) Co., Ltd. Reserves the right of final interpretation. please contact our company to use the latest version for contract.