ASTRONERGY

ASTRO 5 Semi

Create Sustainable and Efficient Green Energy

CHSM72M-HC
Monofacial Series (182)

540~555W

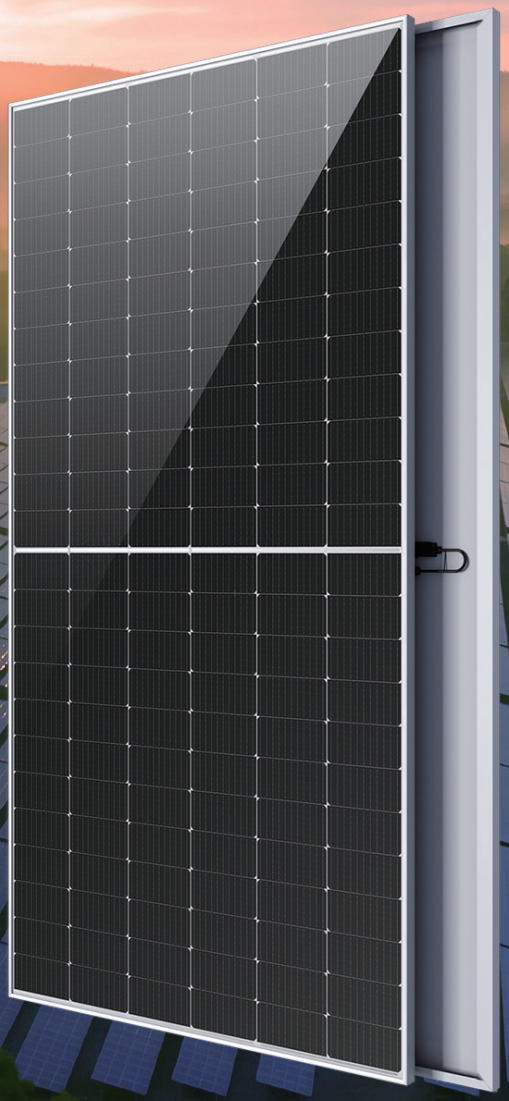

PERC+ / Multi-busbar / Half-cut

Non-destructive cutting

PID resistance

Low BOS cost & LCOE

Assist carbon neutrality CO_2

ISO 9001:2015:ISO Quality Management System
ISO 14001:2015:ISO Environment Management System
ISO 45001:Occupational Health and Safety
The first solar company which passed the Nord IEC/TS 62941 certification audit.

2022 TOP Performance PVEL

Tier 1 BloombergNEF

Underwritten by International Insurer

540~555W	0~+5W	21.5%	≤ 2.0%	≤ 0.55%
POWER RANGE	POWER SORTING	MAX MODULE EFFICIENCY	FIRST YEAR POWER DEGRADATION	YEAR 2-25 POWER DEGRADATION

Electrical Specifications

STC: Irradiance 1000W/m², Cell Temperature 25° C, AM=1.5

Rated output (Pmpp / Wp)	540	545	550	555
Rated voltage (Vmpp / V)	41.76	41.93	42.10	42.27
Rated current (Impp /A)	12.93	13.00	13.06	13.13
Open circuit voltage (Voc / V)	49.70	49.90	50.10	50.30
Short circuit current (Isc /A)	13.72	13.81	13.90	13.98
Module efficiency	20.9%	21.1%	21.3%	21.5%

NMOT: Irradiance 800W/m², Ambient Temperature 20° C, AM=1.5, Wind Speed 1m/s

Rated output (Pmpp / Wp)	403.5	407.3	411.0	414.8
Rated voltage (Vmpp / V)	38.92	39.08	39.24	39.39
Rated current (Impp /A)	10.37	10.42	10.48	10.53
Open circuit voltage (Voc / V)	46.97	47.16	47.34	47.53
Short circuit current (Isc /A)	11.13	11.20	11.27	11.35

Curve

Current-Voltage (550W)

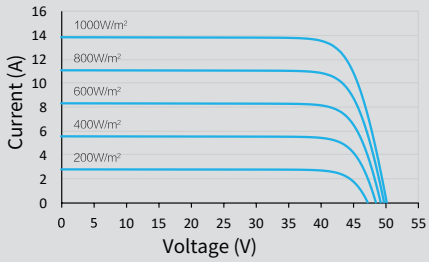

Power-Voltage (550W)

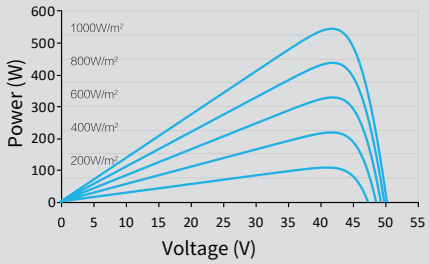

Current-Voltage (550W)

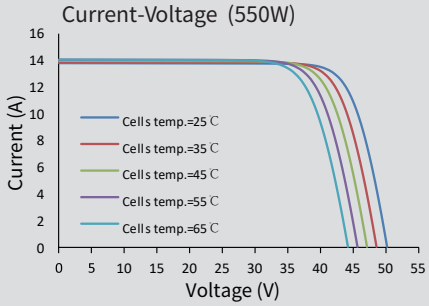

Temperature Ratings (STC)

Temperature coefficient (Pmpp)	-0.34%/°C
Temperature coefficient (Isc)	+0.04%/°C
Temperature coefficient (Voc)	-0.25%/°C
Nominal module operating temperature (NMOT)	41±2°C

Operating Parameters

No. of diodes	3
Junction box IP rating	IP 68
Max. series fuse rating	25 A
Max. system voltage (IEC/UL)	1500V_{DC}

Mechanical Specifications

Outer dimensions (L x W x H)	2278 x 1134 x 30 mm
Cell type	P type mono-crystalline
No. of cells	144 (6*24)
Frame technology	Aluminum, silver anodized
Front glass thickness	3.2 mm
Cable length (Including connector)	Portrait: (+)350 mm,(-)250 mm; Customized length
Cable diameter (IEC/UL)	4 mm² / 12 AWG
① Maximum mechanical test load	5400 Pa (front) / 2400 Pa (back)
Connector type (IEC/UL)	HCB40 (Standard) / MC4-EVO2A (Optional)
Module weight	26.6 kg
Packing unit	36 pcs / box (Subject to sales contract)
Weight of packing unit (for 40'HQ container)	1017 kg
Modules per 40' HQ container	720 pcs

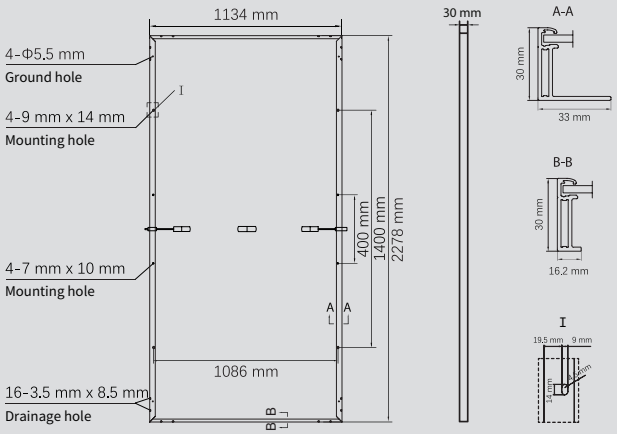

① Refer to Astronergy crystalline installation manual or contact technical department.
Maximum Mechanical Test Load=1.5×Maximum Mechanical Design Load.

© Chint New Energy Technology Co., Ltd. Reserves the right of final interpretation. please contact our company to use the latest version for contract.
https://www.astro-energy.com